Stainless Steel Bearing Inserts

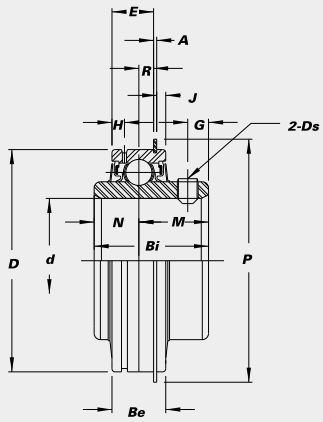

SSER
Set Screw Lock with snap ring

B-type Seal

Balls & Rings	440 Stainless Steel
Set Screws	410 Stainless Steel
Slinger & Seal Frame	302 Stainless Steel
Retainer	302 Stainless Steel
Seal	Silicone Rubber
Lubrication	H-1 Food Grade Grease

- B-type Seals
- Overview of corrosion resistant products – pg. 48

Bearing No.	Bore Dia. of Bearing d (in.)	Bore Dia. of Bearing d (mm)	D	Bi	Be	N	M	E	A	H	R	J	P	G	Ds (in.)	Basic Load Rating (lbs.)	Basic Static Load Rating (lbs.)	Weight (lbs.)
SSER 201-8	1/2																	
202-10	5/8		1.8504	1.2188	0.6250	0.4063	0.8125	0.4844	0.0469	0.1719	0.1719	0.0938	2.0625	0.1875				
204-12	3/4		47.0	31.0	15.9	10.3	20.6	12.30	1.19	4.4	4.37	2.38	52.4	4.8	1/4-28UNF	2,440	1,220	0.49
204		20																
SSER 205-14	7/8																	
205		25	2.0472	1.3750	0.7500	0.5156	0.8594	0.6094	0.0469	0.2031	0.2344	0.0938	2.2656	0.2188				
205-16	1		52.0	34.9	19.1	13.1	21.8	15.48	1.19	5.2	5.95	2.38	57.5	5.6	1/4-28UNF	2,670	1,440	0.60
SSER 206-18	1 1/8																	
206		30	2.4409	1.5000	0.8661	0.6260	0.8740	0.6760	0.6550	0.2165	0.2421	0.1252	2.6575	0.2362				
206-19	1 3/16		62.0	38.1	22.0	15.9	22.2	17.17	1.65	5.5	6.15	3.18	67.5	6.0	1/4-28UNF	3,710	2,020	0.86
206-20	1 1/4S																	
SSER 207-20	1 1/4																	
207-22	1 3/8		2.8346	1.6890	0.9449	0.6890	1.0000	0.7547	0.0650	0.2165	0.2815	0.1252	3.0906	0.2559				
207		35	72.0	42.9	24.0	17.5	25.4	19.17	1.65	5.5	7.15	3.18	78.4	6.5	5/16-24UNF	4,930	2,780	1.39
207-23	1 7/16																	
SSER 208-24	1 1/2		3.1496	1.9370	1.1024	0.7480	1.1890	0.9122	0.0650	0.2362	0.3602	0.1252	3.4016	0.3150				
208		40	80.0	49.2	28.0	19.0	30.2	23.17	1.65	6.0	9.15	3.18	86.4	8.0	5/16-24UNF	5,660	3,300	1.79

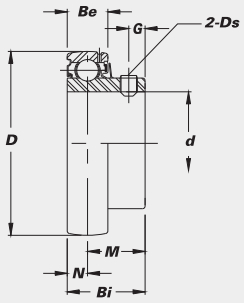

SSB
Set Screw Lock, Narrow Inner Race
Relubricatable

K-type Seal (back)

B-type Seal (front)

Balls & Rings	440 Stainless Steel
Seal	Silicone Rubber
Slinger & Seal Frame	302 Stainless Steel
Retainer	302 Stainless Steel
Set Screws	410 Stainless Steel
Lubrication	H-1 Food Grade Grease

Bearing No.	Bore Dia. of Bearing d (in.)	Bore Dia. of Bearing d (mm)	Be	D	Bi	N	M	G	Ds	Basic Load Rating (lbs.)	Basic Static Load Rating (lbs.)	Weight (lbs.)
SSB 201-8	1/2		0.4724	1.5748	0.8661	0.2362	0.6299	0.1575	10-32UNF	1,770	830	0.22
202-10	5/8		12.0	40.0	22.0	6.0	16.0	4.0				
SSB 204-12	3/4		0.5512	1.8504	0.9843	0.2756	0.7087	0.1969	1/4-28UNF	2,440	1,220	0.33
204		20	14.0	47.0	25.0	7.0	18.0	5.0				
SSB 205-14	7/8											
205		25	0.5906	2.0472	1.0630	0.2953	0.7677	0.2165	1/4-28UNF	2,670	1,440	0.40
205-16	1		15.0	52.0	27.0	7.5	19.5	5.5				
SSB 206-18	1 1/8											
206		30	0.6299	2.4409	1.1417	0.3150	0.8267	0.2362	1/4-28UNF	3,710	2,020	0.60
206-19	1 3/16		16.0	62.0	29.0	8.0	21.0	6.0				
206-20	1 1/4S											
SSB 207-20	1 1/4											
207-22	1 3/8		0.6693	2.8346	1.2598	0.3346	0.9252	0.2362	5/16-24UNF	4,930	2,780	0.93
207		35	17.0	72.0	32.0	8.5	23.5	6.0				
207-23	1 7/16											

IPTCI BEARINGS